384020000

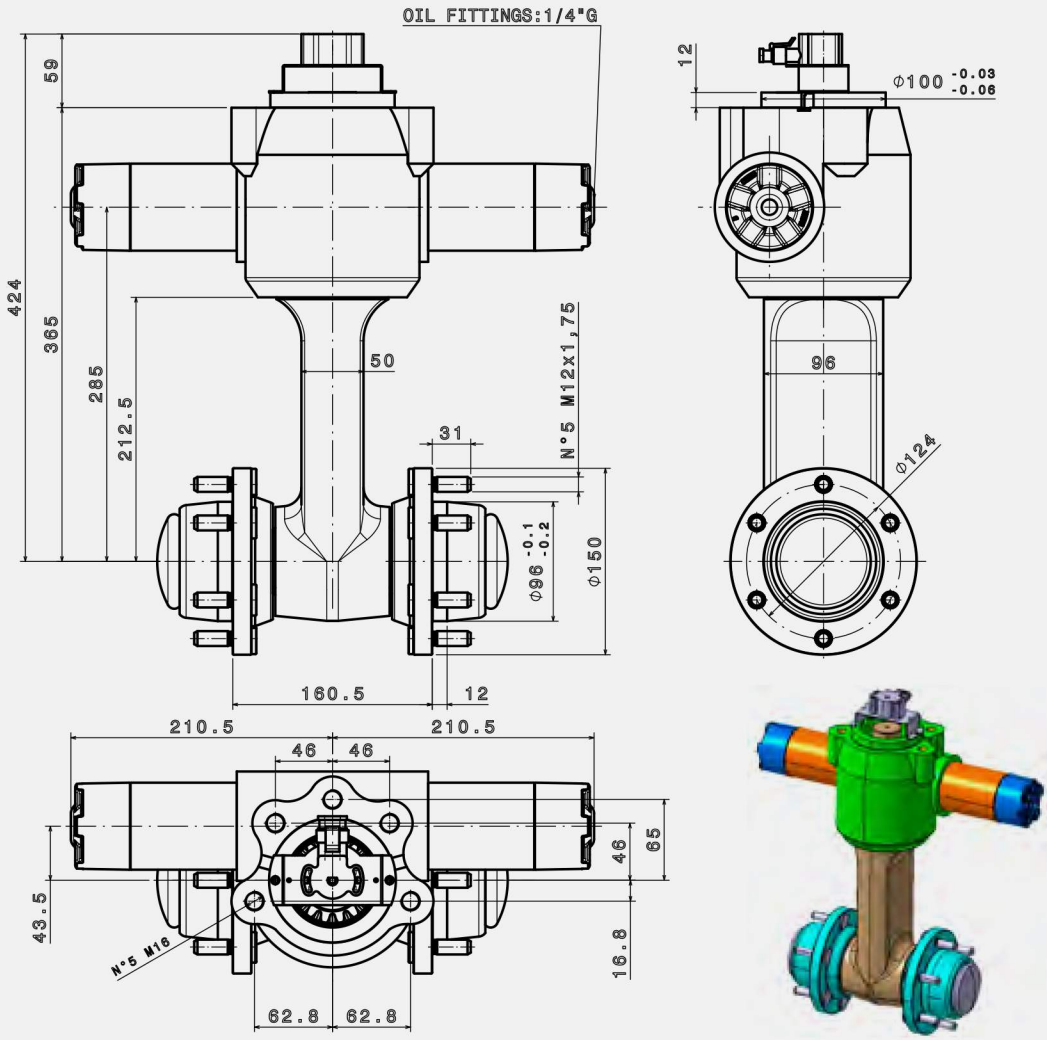

STATIC LOAD (Kg) 2000

APPLICATION

TECHNICAL SPECIFICATIONS

WEIGHT	48 KG
STATIC LOAD	2000 KG
OIL VOLUME FOR TOTAL STEERING	197,3 CM^3
MAX ANGLE STEERING	85° - 90°

* The centering of the wheel hub, and the diameter of the threaded hole or stud can be made at the request